(Post Name: Technical Assistant , Subject/Field: CS & IT , Date of Exam: 28-04-2023 , Time of Exam: 12:30 PM)

1. It is required to retrieve the name of the employees from EMPLOYEE table whose salary is greater than equal to 10000 and less than equal to 50000. Which of the following SQL query is to be used for the above-mentioned requirement:

A) SELECT name
FROM EMPLOYEE
WHERE salary is less than equal to 50000 AND salary is greater than equal to 10000;

B) SELECT name
FROM EMPLOYEE
WHERE salary is greater than equal to 10000 and salary is less than equal to 50000;

C) SELECT name
FROM EMPLOYEE
WHERE salary is BETWEEN 10000 and 50000;

D) SELECT name
FROM EMPLOYEE
WHERE salary BETWEEN 10000 and 50000;

2. In SQL, which of the following command is used to delete the existing row in a table?

A) DELETE B) REMOVE
C) CUT D) CANCEL

3. In context of the indexing, which of the following is false.

A) In B tree, all the leaf nodes must be at the same level, whereas, in B+ tree the leaf nodes may be at different levels but connected to each other like linked list
B) In B tree, all internal and leaf nodes have data pointers, whereas, in B+ tree only leaf nodes have data pointers
C) In B tree, sequential access is not possible, whereas, in the B+ tree, all the leaf nodes are connected to each other through a pointer, so sequential access is possible.
D) All the leaf nodes must be at the same level in B tree as well as in B+ tree

4. Which of the following is not a big data framework?

A) Hadoop B) Hive
C) Spark D) Queue

5. For the sentence, “Find all teachers who had taught all courses offered in the Mathematics Department”, which of the following expressions matches this sentence.

A) ∀ t ε r (Q(t)) B) ¬ t ε r (Q(t))
C) ~ t ε r (Q(t)) D) Ɜ t ε r (Q(t))

6. You have been given a function which has no partial functional dependencies. This function is in which of the following normal form.

A) 4NF B) 3NF
C) 2NF D) BCNF

7. K-map is an effective approach to minimize the Boolean expressions. In K-map, what value is to be considered for “don’t care condition”.

A) Either 0 or 1 B) Any number except 0 and 1
C) 0 D) 1

8. Which of the following is the correct reduction / minimization of Boolean expression:
ABC + ABD + BC + ACD + BCD + ABCD + AD

A) BC + ABD
B) BC + AD
C) BCD + ABD
D) AB + BD

9. One of the logic gates is AND gate. Which input values will cause an AND logic gate to produce a HIGH output?
A) All inputs are HIGH
B) At least one input is HIGH
C) All inputs are LOW
D) One of the inputs is LOW

10. Which of the following is not an Octal number
A) 23056
B) 26853
C) 60015
D) 15032

11. An arithmetic-logic unit (ALU) is the part of CPU and responsible to perform arithmetic and logic operations. The output of the operations performed by ALU are stored into which of the following?
A) Memory Devices
B) Registers
C) Flags
D) Output Unit

12. Cache Memory is a special very high-speed memory and used to speed up and synchronize with high-speed CPU. Whenever the data is found in the cache memory, it is called as
A) FOUND
B) SEARCHED
C) HIT
D) SUCCESSFUL

13. Which of the following addressing mode is most suitable to change the normal sequence of execution of instructions.
A) Indirect
B) Immediate
C) Open
D) Relative

14. There are typically four levels of memory in a memory hierarchy. Which one of the following is the correct sequence of memory according to access time in ascending order?
A) Registers, Main memory, Cache memory, Secondary memory
B) Cache memory, Registers, Main memory, Secondary memory
C) Registers, Cache memory, Main memory, Secondary memory
D) Cache memory, Main memory, Registers, Secondary memory

15. Which of the following is the count of registers in DMA controller with their correct purposes?
A) Three registers for following purposes: registers to store the starting address, word count and the status of the operation
B) Three registers for following purposes: registers to store the starting address, intermediate address and last address
C) Four registers for following purposes: registers to store the starting address, intermediate address, word count and the status of the operation
D) Four registers for following purposes: registers to store the starting address, intermediate address, word count and the last address

16. After the completion of the DMA transfer, the controller raises which of the following signal to notify the processor that the transfer is complete.

A) Acknowledge signal
B) Transfer signal
C) No signal
D) Interrupt signal

17. Which of the following is the best sequence of elements to be inserted one by one into min-heap, so that the required time for insertion is minimum?

A) 10, 20, 35, 25, 28, 34, 41, 37, 38, 27, 25, 43, 42
B) 10, 20, 35, 25, 28, 29, 36, 37, 38, 32, 44, 43, 42
C) 10, 20, 35, 25, 28, 34, 39, 37, 38, 32, 44, 43, 42
D) 10, 20, 35, 25, 28, 40, 50, 37, 38, 32, 44, 43, 42

18. You have been given a C program as follows

```
#include <stdio.h>
int main()
{
	double x = 25.0, a = 25.0;
	float y = 25.0, b = 25.0;
	x = x/6;
	y = y/6;
	a = a / 5;
	b = b / 5;
	if(x == y)
		printf("Same");
	else
		printf("Different");
	if(a == b)
		printf("\t Same");
	else
		printf("\t Different");
	return 0;
}
```

Which of the following is the output of the above C program?

A) Same Different
B) Same Same
C) Different Same
D) Different Different

19. You have been given a Java program as follows

```
class test
{
	public static void main(String args[])
	{
		int s = 0;
		for (int a = 2, b = 2; a < 5 & b < 5; ++a, b = a + 1)
			s = s + a;
		System.out.println(s);
	}
}
```

Which of the following is the output of the above Java program?

A) 6
B) 5
C) 4
D) 3

20. All the variables available in the current shell is displayed using which of the following command.

A) wait
B) var
C) set
D) sh

21. Which of the following data structure is useful for recursion removal?

A) stack B) queue
C) binary tree D) graph

22. Which of the following is the worst sequence of elements to be inserted one by one into binary search tree, so that the required time for insertion is maximum?

A) 1, 2, 3, 4, 5, 6, 7 B) 4, 2, 1, 3, 6, 5, 7
C) 1, 4, 2, 3, 6, 5, 7 D) 7, 4, 2, 1, 3, 5, 6

23. The Longest Increasing Subsequence (LIS) problem is to find the length of the longest subsequence of a given sequence such that all elements of the subsequence are sorted in increasing order. Which of the following is the length of the longest increasing subsequence of the given sequence {11, 7, 12, 9, 16, 11, 14, 22, 9, 33, 21, 50, 41, 60}.

A) 6 B) 7
C) 8 D) 9

24. You have been given a weighted connected graph as follows.

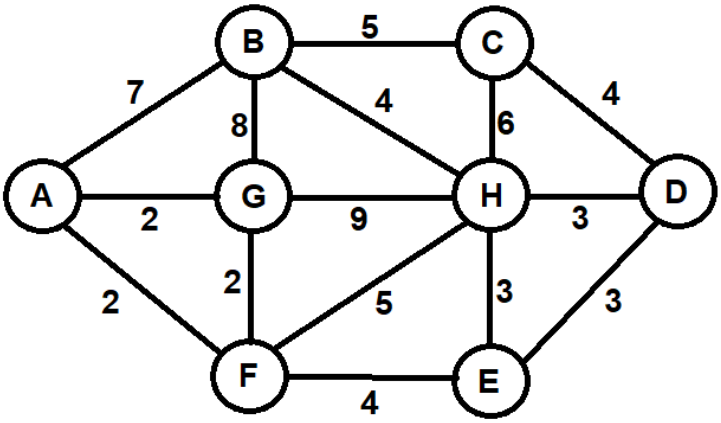

The minimum spanning tree (MST) is a spanning tree constructed from the given graph whose sum of the edges is minimum. Which of the following represents the minimum sum of the edges for the MST constructed from the above graph?

A) 22 B) 24
C) 25 D) 28

25. Depth first search (DFS) and Breadth first search (BFS) are the often-used graph traversal schemes. Which of the following data structures are best suitable to perform DFS and BFS on a graph respectively?

A) Stack and Stack B) Queue and Queue
C) Stack and Queue D) Queue and Stack

26. Quick sort is one of the often-used sorting techniques. Which of the following algorithm design technique is used in designing the approach of Quick sort.

A) Greedy B) Divide and Conquer
C) Dynamic Programming D) None of the mentioned

27. Which of the following algorithm is not dedicated for computation of the shortest path in graphs.

A) Dijkstra's algorithm B) Floyd Warshall algorithm
C) Bellman Ford algorithm D) Prim's algorithm

28. Which of the following represents the time complexity of Binary search?

A) $O(n \log_2 n)$ B) $O(n \log_{10} n)$
C) $O(\log_2 n)$ D) $O(\log_{10} n)$

29. Which of the following is not involved in data mining?

A) Data archaeology B) Data exploration
C) Knowledge extraction D) Data transformation

30. In context of neural networks, what is done in plasticity

A) input pattern keeps on changing
B) input pattern is static
C) output pattern keeps on changing
D) output is static

31. What is DataFrame in Python?

A) It is one-dimensional array
B) It is a two-dimensional data structure
C) It is a file handling function
D) It is a conditional statement

32. Which of the following is not a valid parameter in slice () function in Python?

A) start B) end
C) step D) condition

33 Python provides the re module that supports the use of regex in Python. Various MetaCharacters are used in functions of module re. Which of the following is not a valid MetaCharacters in re module?

A) $ B) ?
C) + D) #

34. Which of the following is not available in Python for analyzing & presenting data?

A) Pie Chart B) Histogram
C) Column Chart D) All mentioned are available

35. Which of the following will not be given by the regular expression ab+c

A) abc B) aac
C) abbc D) abbbc

36. You have been given a deterministic finite automata (DFA) having 4 states (where Q_0 is starting state and Q_3 is final state) and 2 input symbols (0 and 1) as follows

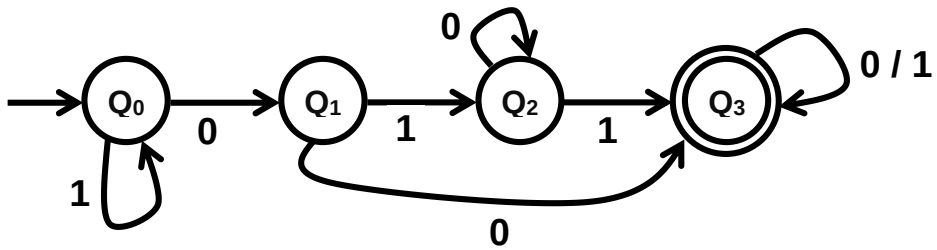

Which of the following string will not be generated by the above DFA?

A) 1011 B) 11000
C) 11010011 D) 10100

37 You have been given a context free grammar {N, T, P, S} as follows

N = {S}, T = {a, b}, Starting symbol = S, P = S → SS | aSb | ε

Which of the following will not be derived from the given context free grammar?

A) abab B) abaabb
C) aabbaa D) ab

38. You have been given two statements with a blank entry in each statement as follows

Statement 1: A problem is _____ if we can construct a Turing machine which will halt in finite amount of time for every input and give answer as 'yes' or 'no'.

Statement 2: A problem is _____ if there is no Turing machine which will always halt in finite amount of time to give answer as 'yes' or 'no'.

Which of the following words you will fill in Statement 1 and Statement 2 respectively?

A) decidable, undecidable B) flexible, inflexible
C) context free, context sensitive D) finite, infinite

39. Which of the following method of proof we use in pumping lemma to prove that a language is regular or not.

A) Direct proof B) Proof by induction
C) Proof by contradiction D) None of the mentioned

40. Which of the following is not a valid phase/stage in compiler design

A) Code optimizer B) Code corrector
C) Code generator D) Semantic analysis

41 While writing a program, the programmer by mistakes added two numbers instead of multiplying them. At which stage, the compiler will detect this error.

A) Lexical analysis B) Code optimization
C) Parsing D) None of the mentioned

42. You have been given a syntax/parse tree as follows

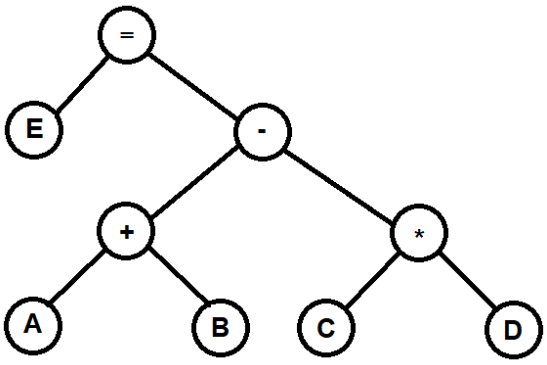

This syntax/parse tree is generated for which of the following instruction.

A) E = A + B – C * D B) A + B – C * D = E
C) E - A + B = C * D D) E = C * D – A + B

43. Following set of instructions represent a code before optimization

```
i = 0;
if (i == 1)
{
    a = x + 5;
}
```

In context of above code, which of the following is the code after optimization.

A) a = x + 5; B) i == 1;
C) i = 0; D) none of the mentioned

44 In concurrent computing, the problem where a process is perpetually denied necessary resources to process its work is called as
A) Paging B) Deadlock
C) Starvation D) Caching

45. For what purpose, Banker's algorithm is used.
A) Memory Management B) Inter-process Communication
C) File Handling D) Deadlock Avoidance

46. One of the tasks of an Operating System is to maintain the Page table. It is maintained for
A) each thread B) each process
C) each instruction D) each address

47. An Operating system solves the problem of external fragmentation by
A) providing large memory space B) providing small memory space
C) compaction D) first fit

48. Under which of the following category, the round robin scheduling falls
A) Preemptive scheduling B) Non-preemptive scheduling
C) Semi-preemptive scheduling D) None of the mentioned

49. Which of the following correctly describes the FIFO job scheduling algorithm
A) It executes the job first that came in last in the queue
B) It executes the job first that came in first in the queue
C) It executes the job first that is going to take maximum time
D) It executes the job first that is going to take minimum time

50. Application layer is the layer through which users interact. Which of the following is not an application layer protocol?
A) TELNET B) TCP
C) FTP D) SMTP

51. Line Printer Daemon (LPD) is designed for printer sharing, where "daemon" is a server or agent. Which of the following is the valid command for LPD
A) lpd [-d] [-l] [-D DebugOutputFile]
B) clear ip lpd binding {address | * }
C) Run lpd in runlevel 5
D) lpd [options...][host[port]][-c command]

52. Internet Protocol version 6 (IPv6) is the most recent version of the Internet Protocol (IP). In Internet Protocol Version (IPv6) addresses, the addresses start with eight 0's are called as
A) Reserved addresses B) Multicast addresses
C) Unicast addresses D) Solo cast addresses

53. In context of virtual circuit, which of the following is false
A) Packets are delivered to the receiver in the reverse order sent by the sender
B) Single global packet overhead is used in virtual circuit
C) There is no need for overhead in each packet
D) It provides only connection-oriented service

54. In which of the following, the two network nodes establish a dedicated communications channel through the network before the nodes may communicate.
A) Local Network Switching B) Network Channel Communication
C) Network Address Translator D) Circuit Switching

55. Which of the following is a method of mapping an IP address space into another by modifying network address information in the IP header of packets while they are in transit across a traffic routing device?
A) Private Network B) Network Address Translation
C) Public Network D) Local Network

56. The protocol field enables the demultiplexing feature so that the IP protocol can be used to carry payloads of more than one protocol type. Its most used values are 17 and 6 for
A) UDP and TCP respectively B) TCP and UDP respectively
C) ICMP and IGMP respectively D) IGMP and ICMP respectively

57. Which of the following is not the advantage of Circuit Switching?
A) Guaranteed bandwidth
B) Suitable for real-time communication
C) Low latency
D) Inefficient use of bandwidth

58. Link state routing protocol maintains three tables namely
A) Routing table, Truth table, and Topology table
B) Routing table, Truth table, and Neighbor table
C) Routing table, Neighbor table, and Topology table
D) Truth table, Neighbor table, and Topology table

59. What is the basis to select the best path to reach a destination network using distance vector routing protocol?
A) Hop Count B) Traffic Pattern
C) Packet Size D) Bandwidth

60. Which of the following software is designed to observe each activity on the internet of the victim, gather all information in the background, and without victim's permission send it to someone else?
A) Malware B) Firewall
C) Spyware D) Antivirus

61. Which of the following is a popular open-source tool used for discovering network as well as security auditing.
A) Antivirus B) Nmap
C) Metasploit D) Firewall

62. Which of the following is not a proper way to maintain the confidentiality?
A) Switching off the device B) Fingerprint detection
C) Face recognition D) Two-step verifications

63. Identify the correctness of following statements:
S1: Ping storm is an attack in which the site is not capable of answering valid request
S2: Worm is a program that copies itself

A) Both S1 and S2 are correct
B) S1 is correct whereas S2 is wrong
C) S1 is wrong whereas S2 is correct
D) Both S1 and S2 are wrong

64. Identify the correctness of following statements:
S1: Smurfing is a technique in which a program attacks a network by exploiting IP broadcast addressing operations
S2: Spoofing is the attack in which a user creates a packet that appears to be something else

A) Both S1 and S2 are correct
B) S1 is correct whereas S2 is wrong
C) S1 is wrong whereas S2 is correct
D) Both S1 and S2 are wrong

65. Evaluate the correctness of following statements
(i) The encryption process where same keys are used for encrypting and decrypting the information is known as Symmetric Key Encryption.
(ii) The encryption process where different keys are used for encrypting and decrypting the information is known as Asymmetric Key Encryption.

A) Both statements are incorrect
B) Only statement (i) is correct
C) Only statement (ii) is correct
D) Both statements are correct

66. Which of the following is not a well-known examples of symmetric key encryption methods

A) Digital Encryption Standard (DES)
B) Triple-DES (3DES)
C) BLOWFISH
D) Rivest Shamir Adleman (RSA)

67. One of the widely used hash functions is MD5. Which of the following is the count of hash value bits produced by MD5?

A) 32 bits B) 64 bits
C) 128 bits D) 256 bits

68. Encryption of plain text using vigenere cipher is done by making use of vigenere table. How many rows and columns are there in vigenere table?

A) 26 rows and 20 columns B) 20 rows and 20 columns
C) 20 rows and 26 columns D) 26 rows and 26 columns

69. The GCD of 621 and 483 is

A) 1 B) 23
C) 69 D) 81

70 Remainder when $\mathbf{1}! + \mathbf{2}! + \ldots + \mathbf{100}!$ is divided by $\mathbf{12}$?

A) 6 B) 7
C) 8 D) 9

71. The smallest positive integer for which $\tau\ (n)\ =\ 10$ is

A) 48 B) 98

C) 128 D) 124

72. The value of $17^{341} mod\ 5$ is

A) 2 B) 3

C) 4 D) 5

73. By the De-Morgan's Law $(A^C UB)^c$ is

A) $A^c\ \cup\ B^c$ B) $A \cap B^c$

C) A^c D) B^c

74. If $A = \{1,2\}$ and $B = \{3,4\}$ then $|A \times B|$ is

A) 1 B) 4

C) 2 D) 3

75 The characteristic roots of the 3×3 matrix A are $3, 2$ and -1. If $B = A^2 - A$ the determinant of B is

A) 24 B) -2

C) 12 D) -15

76 Let G be the group of all symmetries of the square, then the number of conjugate classes in G is

A) 4 B) 5

C) 6 D) 7

77. If X is a random variable, then the expectation of X holds the property

A) $E(aX + b) = E(aX)$ B) $E(aX + b) = aE(X) + b$

C) $E(aX + b) = E(aX) + b$ D) NOTA

78 By the central limit theorem, the standard error of n random samples with standard deviation σ is

A) $\frac{1}{\sqrt{n}}$ B) $\frac{\sigma}{\sqrt{n}}$

C) $\sigma\sqrt{n}$ D) $\frac{\sqrt{n}}{\sigma}$

79 If the standard deviation of the spot speed of vehicles in a highway is $8.8\ kmph$ and the mean speed of the vehicles is $33\ kmph,$ the coefficient of variation in speed is

A) 0.1517 B) 0.1867

C) 0.2666 D) 0.3645

80. If E denotes expectation, the variance of a random variable X is given by

A) $E[X^2] - E^2[X]$ B) $E[X^2] + E^2[X]$

C) $E[X^2]$ D) $E^2[X]$

81. Which of the following diagram represents the given group of words:

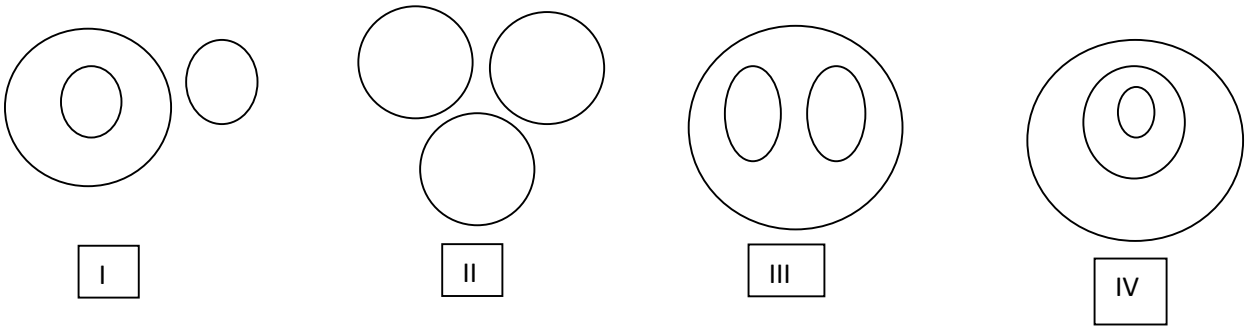

Boys, College, Infants

A. II
B. I
C. IV
D. III

82. Rakesh is standing at a point. He walks 20 m towards the East and further 10 m towards the South, then he walks 35 m towards the West and further 5 m towards the North, then he walks 15 m towards the East. What is the straight distance in metres between his starting point and the point where he reached last?

A. 0
B. 5
C. 10
D. 15

83 Choose the statement that is best supported by the information given in the question passage:

In the 1966 Supreme Court decision Miranda v. Arizona, the court held that before the police can obtain statements from a person subjected to an interrogation, the person must be given a Miranda warning. This warning means that a person must be told that he or she has the right to remain silent during the police interrogation. Violation of this right means that any statement that the person makes is not admissible in a court hearing.

This paragraph best supports the statement that

A. Police who do not warn persons of their Miranda rights are guilty of a crime.
B. A Miranda warning must be given before a police interrogation can begin.
C. The police may no longer interrogate persons suspected of a crime unless a lawyer is present.
D. The 1966 Supreme Court decision in Miranda should be reversed

84 The following question consists of three statements. Based on the first two statements, the third statement may be true, false, or uncertain.

I) Mara runs faster than Gail.
II) Lily runs faster than Mara.
III) Gail runs faster than Lily.

If the first two statements are true, the third statement is

A. True
B. False
C. Uncertain
D. None of the above

85 The question given below consists of a statement, followed by two arguments numbered I and II. You have to decide which of the arguments IS a ‘strong’ argument and which IS a ‘weak’ argument:
Statement: Should there be students union in college/university?
Arguments: I - No. This will create a political atmosphere in the campus.
II - Yes, it is very necessary Students are future political leaders.

A. Only argument I is strong
B. Only argument II is strong
C. Either I or II is strong
D. Both I and II are strong

86 Given below are four statements. Among them two are related in such a way that they can both be true but they cannot both be false. Select the code that indicates those two statements:
Statements:
(I) Honest people never suffer.
(II) Almost all honest people do suffer.
(III) Honest people hardly suffer.
(IV) Each and every honest person suffers.

A. (I) and (II)
B. (I) and (III)
C. (I) and (IV)
D. (II) and (III)

87 Read the information given below and on the basis of the information, answer the question

There are five persons P, Q, R, S, and T. One is football player, one is chess player, one is hockey player. P and S are unmarried ladies and do not participate in any game. None of the ladies plays chess or football. There is a married couple in which T is the husband. Q is the brother of R and is neither a chess player nor a hockey player.

Who is the wife of T?
A. Q
B. R
C. S
D. None of these

88 Study the table below carefully and answer the question that follows. Given below is a table depicting the number of male and female employees in 6 different companies

Company Name	No. of Employees	Ratio of male to female
Infosys	3200	5:3
TCS	4400	5:6
Adobe	1200	2:1
Wipro	2600	6:7
Ericsson	4500	5:4
Oracle	1500	2:3

Find the difference between the total number of males working in TCS and Wipro together and the number of male employees working in Ericsson and oracle together.

A. 100
B. 120
C. 150
D. 80

89 Read the information given below and on the basis of the information, answer the question

(i) Six flats on a floor in two rows facing North and South are allotted to P, Q, R, S, T and U.

(ii) Q gets a north facing flat and is not next to S.

(iii) S and U get diagonally opposite flats.

(iv) R next to U, gets a south facing flat and T gets a north facing flat

Which of the combinations get South facing flats?

A. URP B. UPT

C. QTS D. None of these

90 Study the following graph carefully to answer the questions that follow:
Number of students (in thousand) enrolled in three different districts in six different years

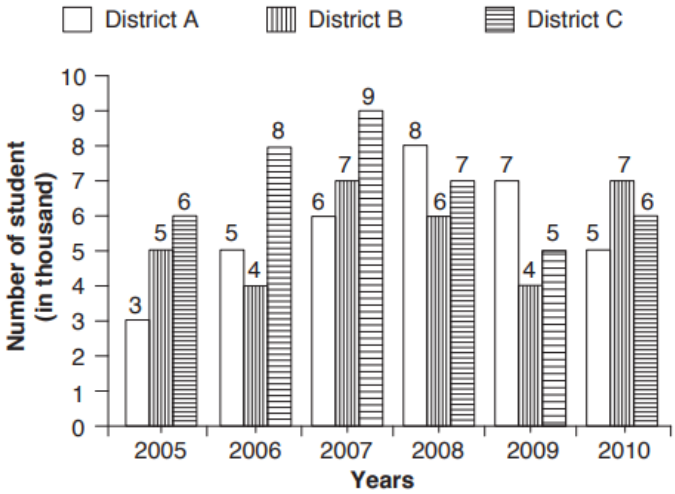

Total number of students enrolled in District A and District B together in the year 2010 was what percentage of the total number of students enrolled in District A in the year 2008?

A. 150 B. 120

C. 250 D. 220

91 The circle graph given here shows the spending by a family on various items during the year 1999. Study the graph and answer the question.

Per cent of money spent by a family on various items during 1999

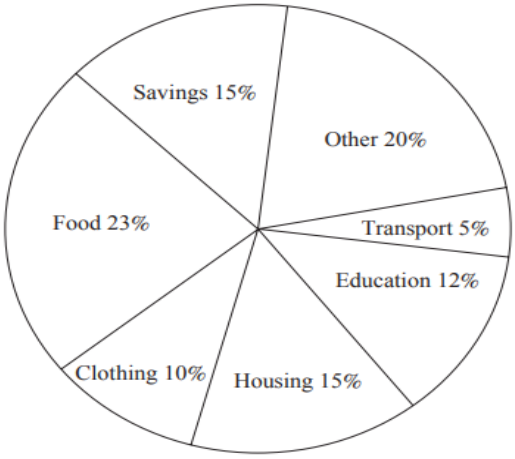

Graph shows that the maximum amount was spent on_____:

A. Food B. Housing
C. Clothing D. Others

92 If 'CAMERA' is coded as 'ZIVNZX' in a certain code language, then how would you code 'CHAPRA' in that code language?

A. ZISKZX B. ZIKSZX
C. ZIKXSZ D. ZIKZSX

93. If P$Q means 'P is the father of Q', P#Q means 'P is the mother of Q', and P*Q means 'P is the sister of Q'. Then, how is Q related to N in N#L$P*Q?

A. Grandson B. Granddaughter
C. Nephew D. Data inadequate

94 In the following question, select the related number from the given alternatives.
6 : 18 : : 4 : ?

A. 2 B. 6
C. 9 D. 16

95 Find the odd word pair from given options :-

A. Circle B. Square
C. Rectangle D. Triangle

96. If CLOCK is coded as 34235 and TIME as 8679, what will be the code for MOLEK?

A. 62495 B. 62945
C. 72495 D. 72945

97. Find the odd letters from the given alternatives:

A. DEB B. RTP
C. HIF D. NOL

98 If D = 4, COVER = 63, then BASIS = ?

A. 49 B. 50

C. 54 D. 55

99. Cells : Cytology :: Insects : _____

A. Entomology B. Ornithology

C. Anatomy D. Onomatology

100 The question given below consists of a statement, followed by two arguments numbered I and II. You have to decide which of the arguments is a ‘strong’ argument and which is a ‘weak’ argument.

Statement: Should the railways in India be privatized in a phased manner like other public sector enterprises?

Arguments:

I. Yes. This is the only way to bring in competitiveness and provide better services to the public.

II. No. This will pose a threat to the national security of our country as multinationals will enter into the fray.

A. Only argument I is strong B. Neither I nor II is strong

C. Only argument II is strong D. Either I or II is strong